International Journal of Management Research and Emerging Sciences
Vol 15, No 1, March 2025, PP. 80-100

Green Awareness and Green Purchase Intention: Examining the Mediating Role of Environmental Attitude among University Students in Nepal

Kishor Hakuduwal
Bhaktapur Multiple Campus, Tribhuvan University, Nepal

Corresponding: khakuduwal@gmail.com

ARTICLE INFO

Article History:
Received: 30 Oct 2024
Revised: 04 Jan 2025
Accepted: 17 Mar 2025
Available Online: 24 Mar 2025

DOI:
https://doi.org/10.56536/ijmres.v15i1.757

Keywords:
Green Awareness, Green Purchase Intention, Environmental Attitude, University Students, Nepal

JEL Classification:
C38, D91, I23, M31, Q56

ABSTRACT

Climate alteration, air contamination, waste cohorts, and ozone reduction are key environmental issues. The problem of environmental sustainability has attracted the attention of consumers, researchers, business firms, and governments. Consumers' environmental knowledge and awareness change their purchasing attitudes toward biodegradable goods or items for the assistance of upcoming groups. This study examined the relationship between green awareness and green purchase intention among university students in Nepal, and the mediating role of environmental attitudes. Data were collected from 400 students at Tribhuvan University, Nepal using purposive sampling. A structured questionnaire was self-administered, with gender, education level, employment status, age group, and marital status as demographic variables and measures of green awareness, environmental attitude, and green purchase intention. The relationships between green awareness, environmental attitudes, and green purchase intentions were examined using Structural Equation Modeling (SEM). SPSS version 20 and STATA version 14.2 software were used in this study. The results indicate that green awareness has a positive effect on both environmental attitudes and green purchase intentions. The connections between variables were determined using Pearson's correlation coefficient test. The goodness of fit of the model was evaluated using the chi-square test, Tucker-Lewis Index, Comparative Fit Index, and Root Mean Square Error of Approximation. Environmental attitude is depicted as a mediator in the connection between green awareness and green purchase intention. This study clarifies how environmental education and awareness affect young consumers' purchasing decisions in emerging countries, such as Nepal. This study contributes to both academic research and practical aspects of sustainability marketing, environmental policy, and consumer behavior studies in Nepal.

© 2025 The authors, under a Creative Commons Attribution-Non-Commercial 4.0.

INTRODUCTION

Technological advances and economic growth have made life easier but have also caused environmental issues such as air pollution, climate change, and global warming, affecting the sustainability of the environment and society (Zhuang et al., 2021). Recently, there has been worldwide focus on protecting the environment, with more attention being paid to how consumer habits can help. Major ecological complications include the greenhouse effect, air contamination, and the adverse impacts of human actions on nature (Ahmed et al., 2023).

Increasing pollution levels and damage to ecosystems have increased public awareness regarding environmental issues. People are more worried about leaving a healthy and clean world for future generations; therefore, they think about how their purchases will affect the environment. Those concerned about the environment now prioritize eco-friendly products. These products aim to

minimize environmental harm, use fewer natural resources, support recycling, and be sustainable (Onurlubaş, 2018). The real impression of buying eco-friendly goods for conservation is a significant reason for the desire to choose green products (Nguyen et al., 2024). Environmental awareness is the foundation of eco-friendly purchasing habits (Liu & Madni, 2024). Individuals were informed about environmental concerns, and they have achieved notable progress in their actions, beliefs, and understanding of environmental protection (Zhuang et al., 2021). Consumers choose companies with green practice awareness, which further benefits their health and lifestyle (Aldaihani et al., 2024). Enhancing a buyer's purchasing behavior related to environmentalism (i.e. environmental knowledge, feelings, and responsibility) is a crucial aspect of green purchasing (Liu & Madni, 2024; Lopes et al., 2024).

University student's engagement in social and environmental issues could influence future sustainable purchasing behaviors (Wang et al., 2014). Given their importance as a consumer demographic, the factors that do and do not influence green purchasing choices are of significant importance for promoting green consumption and environmental preservation (Shang et al., 2024). Similar to previous cases with people of different age groups, university students tend to be more open to new things than other groups. Eco-friendly purchasing habits can be investigated to boost the marketplace and widen the range of green items offered. Green purchasing is more likely to occur if university students are encouraged to buy products (Shang et al., 2024). In the face of dwindling natural resources, this study identifies the influence of awareness and perceptions of recyclable goods on university students' green buying intention in Nepal.

This study aimed to explore the effects of environmental awareness on the purchasing intentions of green products among Nepalese university students, with particular reference to environmental attitudes. This study highlights eco-friendly products that are crafted from natural materials, are reusable, recyclable, biodegradable, non-toxic, require minimal maintenance, and do not harm the environment. This approach enables us to understand the psychological aspects that lead people to develop sustainable purchasing options in developing countries.

LITERATURE REVIEW

Theoretical Underpinning

This study examines the theory of planned behavior (TPB) and the value belief norm (VBN) theory. According to Ajzen's Theory of Planned Behavior (1991), people's attitudes (what they believe others expect of them, their subjective norms), what they believe people around them expect of them (their perceived behavioral control) and their intentions toward a behavior (the intention to perform in a positive technique) may manage their intended and actual behavior (Ajzen, 1991). This shows how people tend to act depending on their beliefs and plans, and they often use them to predict whether people will make an environmentally friendly purchase or do something green.

According to the Value Belief Norm theory anticipated by Stern et al. (1999), environmentally responsible behavior is related to morals, beliefs about the environment, and moral norms (Stern et al., 1999). Based on this theory, people are more likely to behave in an ecologically responsible manner if they trust that the issue of environmental challenge is personally important or morally obliged. This study integrates the TPB and VBN philosophies to forecast the intention to engage in green purchases depending on environmental awareness and positive environmental attitudes.

Green Product

'Green products,' known also as 'eco-friendly products,' are products that have been intended both safe for people and safe for the environment. In addition, the health benefits to users come from the fact that they contain no harmful chemicals and are minimal waste producers (Agovino et al., 2017). Recycling, waste reduction, and energy conservation are the main products that protect the environment. This highlights the efficient utilization of resources through recycling, reusing materials, and the use of renewable resources such as sunlight, wind, and water (Singh et al., 2019). According to Sarkis et al. (2019), green products assist in decreasing greenhouse gas release, electric utility costs, and electric consumption by producing clean energy from natural resources such as solar panels, wind generators, and hydropower generators. Green products are also considered organic and sustainable foods. Grown with fewer chemicals and processed, they protect soil and water and support biodiversity (Vassilieva et al., 2020). The role of eco-friendly goods is to mitigate climate change and reduce environmental damage. However, they accomplish this by using fewer resources, producing less pollution, and wasting fewer resources. Furthermore, they assist in preserving natural ecosystems and providing better services to nature (Rambandara & Dilanthi, 2024).

Green Awareness

Green awareness, which indicates a person's information and empathy for environmental issues, is a key factor that affects in sustainable consumption (Joshi & Rahman, 2015). The key factor in changing consumers to use a sustainable product is environmental awareness. Green awareness is a phenomenon of propagating everyone's behaviors for the attitude and the application of how to live a green life based on the change of lifestyle and effect on other people to lead a green life, because of protecting nature (Lestari et al., 2021). Specifically, users who are more conscious of ecological matters give more careful consideration when choosing green items that are alert to health and the atmosphere (Zhang et al., 2018).

Green Purchase Intention

The term green purchase intention is presented as a consumer's intention to purchase an environmentally friendly product, over an environmentally harmful product (Moslehpour et al., 2023). Consumer behavioral intention represents the propensity to engage in certain purchasing behaviors (Diva, 2020). Behavioral intention corresponds to an inclination to buy green goods (Ahmed et al., 2023). The aim to buy is measured as a key to structuring the correct stimulus to drive and push consumers to obtain the products and services they offer. Green purchase intention is identified as a

factor representing consumers' current and future consumption of naturally responsive goods, and it can thus be employed to measure consumers' green demand (Zhuang et al., 2021). Green purchase intention is also closely related to consumer readiness to acquire green items (Chen & Chang, 2012).

Environmental Attitude

A person's attitude is an overall apprehension of pleasantness or unpleasantness in the positive-negative dimension (Kim, 2023). According to Shang et al. (2024), the attitude toward green purchases is a person's evaluation of the value of shopping for environmentally friendly products. It is the individual's perception of the natural environment and the initiatives that protect it. Environmental attitudes refer to subjective opinions, emotional reactions, and behavioral intentions regarding environmental activities and issues (De Medeiros & Ribeiro, 2017). Attitude toward the situation and linked with greater enthusiasm to pay for biodegradable items and other consumer purchases. Green products are chosen by consumers who are more conscious of and care about environmental problems (Chang et al., 2019).

Empirical Review

Among Belt and Road countries, Chen et al. (2018) found that attitude towards the environment, product, social influence, and perceived monetary value, are all completely related to purchase intention. Zulfiqar et al. (2019) showed that cause-related marketing engenders positive relationships with green product purchase choices in Pakistan, and people within the country are also interested in products that are committed to societal and environmental concerns. Ogiemwonyi et al. (2020) found that awareness was the biggest predictor with a secondary influence for green products. In addition, the environmental attitude was found to be a complete mediator of affiliation with eco-friendly product value and green culture, but not in the case of environmental awareness and the green culture of Abuja, Nigeria-based urban green consumers. Al-Quran et al. (2020) discovered that preservation attitudes stimulate purchasers' intention to buy green goods in Jordan, although the effect is statistically insignificant. Zhuang et al. (2021) showed that perceived value, attitudes, and beliefs related to green have a noteworthy impact on the aim to acquire green goods. Sarmad et al. (2024) revealed that data irregularity has a constructive result on the superiority of online assessments, the acceptance of those assessments, and the purchasing behavior of green products among Pakistani customers; furthermore, the tendency to trust reviews aided both buying behavior and review acceptance, while review acceptance facilitated the purchase of green products.

Kingston and Paulraj (2023) established that the intention to buy green packaging is affected by environmental concerns, health awareness, and consumers' perceived values regarding green packaging in Thoothukudi and Tamil Nadu. Moslehpour et al. (2023) revealed that concern, knowledge, products, and innovation of the environment are positively related to the intention to buy green goods and that purchasers meaningfully and certainly arbitrate the relationship between environmental apprehension, green knowledge, eco-friendly products, eco-invention, and the goal of acquiring green items in Taiwan's industry. Ahmed et al. (2023) showed a noteworthy and important effect of green consumer value, marketing mixes for environmental friendliness, and brashness on the

aim of acquiring green goods from American consumers. Furthermore, green psychological benefits serve as mediators in the association between attitude, value, marketing mix, and purpose of acquiring a green product.

Chanda et al. (2023) found that individual norms, attitudes, and perceived behaviors have a constructive and noteworthy connection with the intention to buy green products, and the mediating impact of green attitude in connection with ecological understanding and intention to acquire green goods from Bangladeshi consumers. Hayat et al. (2023) showed that social well-being actions lead to direct changes in consumers' impulse-buying behavior in China because consumers see firms as socially responsible. Imiru (2023) discovered that perceived value, quality, risk, trust, collectivism, advertising, packaging, and prices of green goods influence the intention to purchase environmentally friendly products and services in the Ethiopian context. Kim and Lee (2023) discovered that the knowledge and perception of green items have a substantial effect on the buying motive of green items in the Republic of Korea. Hoang and Hoang (2023) found that awareness of health and ecological concerns represents internal mechanisms that significantly influence the establishment of buying attitudes toward Vietnamese consumers' green products. Zaheer et al. (2023) found that Pakistani consumers' green purchase intentions were expressively related to brand positioning, attitude, and environmental concerns.

Wang et al. (2023) found that biospheric and collectivistic values absolutely affect explicit ecological brashness, but altruistic worth completely impacts intrinsic ecological arrogance in the intention to visit hotels with green environments in China. Aldaihani et al. (2024) suggested that ecological behavior plays an optimistic and substantial facilitating role in the connection between green promotion strategies and the buying aim of Generation Z consumers in the Malaysian retail sector. Nguyen et al. (2024) revealed that electronic trust, value, and word of mouth certainly move the aim of buying green products in big cities in Vietnam. Lopes et al. (2024) showed that environmental awareness is linked to benefits, quality, price, and upcoming approximations to form environmentally friendly decisions of Portuguese consumers regarding green product intention.

Lasuin and Ng (2014) discovered that awareness of the environment and self-perception has a notable influence on the aim towards green buying amongst undergraduate students at the University Malaysia Sabah. In a research conducted on postgraduate students at Nnamdi Azikiwe University, Awka, Nigeria, Ayodele et al. (2017) discovered that green awareness significantly and entirely affects customers' aims to buy eco-friendly electrical products. Indriani et al. (2019) discovered that attitude serves as a complete mediator between eco-friendly familiarity and green buying intention of students at State Universities in Manado, Indonesia.

Ansu-Mensah (2021) illustrated that green-perceived quality has the most and green-perceived availability has the least effect on the buying intentions of students in Ghana who already possess Diploma and Higher National Diploma certifications and are currently employed in different firms. He also determined that awareness of eco-friendly goods significantly affects university students' intention to purchase green items, primarily because of price, high value, and exceptional quality.

George and Silva (2022) discovered that general awareness, concern for the environment, and perception of products stimulate the buying intention for green goods among students at Sri Lankan Universities, such as Sri Jayewardenepura, Colombo, Kelaniya, and Moratuwa.

Simiyu and Kariuki (2024) showed that the affiliation of ecological apprehension, self-image, and green buying purpose is influenced by the social inspiration of university students of Nairobi, in Kenya. Rambandara and Dilanthi (2024) recognized five elements that influence purchase intentions in their examination of university students' purchasing intentions for green products in Sri Lanka: environmental attitudes, product features, social impact, firsthand experiences, and ecological alertness. Shang et al. (2024) showed that green attitudes, personal standards, and apparent behavior positively affect eco-friendly purchases. Awareness of sustainability has a noteworthy controlling impact on environmental attitudes and the buying intention of green goods, but it has adverse effects on the purchase of green goods by university students in China.

In Nepal, several studies have been conducted on various aspects of consumers' purchase of environmental goods. Ghimire (2020) studied consumers' attitudes toward environmental protection, environmental knowledge, eco-friendly product awareness, and green consumption intention. Green product knowledge, benefits, cost-effectiveness, and promotional strategies are constructive inspirations for acquiring green goods and services for consumers in Nepal (Dhakal, 2022). Lamichhane (2022) determined that customer insight decreases when green items are priced high while the green product quality, accessibility, and advertising strategy of these products are associated with consumer observation of green items in Pokhara Valley, Nepal.

Rauniyar and Bhattacharya (2023) indicated that green purchasing in Nepal is affected by the readiness to purchase as well as environmentally friendly communication in advertisements, promotional channels, and green marketing. For instance, Chaudhary et al. (2024) showed that eco-labeling, environmental awareness, green pricing, and green packaging have an intense influence on consumer decisions to acquire specific goods, implying that green publicizing will play a considerable part in influencing consumer preferences given the increasing demand for sustainable goods.

Another study conducted by Mishra and Kapair (2024) concluded that consumers' willingness to procure green items is determined by economic value, emotional value, awareness for the environment, and attitude. In the Kathmandu Valley, Basnet et al. (2024) found a direct positive substantial result for eco-labeling, sustainable branding and packaging, eco-friendly products, pricing with premium, and beliefs about consumers' attitudes and environmental concerns towards the environment. Using consumers from the same valley, Bishowkarma and Lohala (2024) show the effect of premium price acceptance and green brand perception on consumers' motives to buy green goods.

Hypothesis Development

Green Awareness and Green Purchase Intention

Environmental awareness refers to the use of environmentally conscious products and ignores the use of conventional goods (Wu & Yang, 2018). Green consciousness plays a significant role in persuading consumers to engage in eco-friendly buying behavior for sustainable development. This changes consumers' minds regarding environmentally friendly products. As environmentalism and purchaser consciousness of environmental safety grow, customers are focusing more on buying green goods that are not damaging to the environment and beneficial for the user (Wu & Yang, 2018; Trivedi et al., 2018). Worldwide consumer knowledge about environmental health has led people to make significant lifestyle changes to become more environmentally friendly. Such environmental awareness of the benefits of sustainably oriented goods enhances customer apprehensions regarding overcoming global warming. Green awareness signifies the recognition and understanding of environmental issues that influence human behavior in multiple ways, including lifestyle adaptations, a rising preference for biodegradable items, and heightened concern regarding environmental harm (Suki, 2013). Based on the aforementioned studies, the following hypothesis can be developed:

H1: Green awareness has a significant relationship with environmental attitude.

Environmental Attitude and Green Purchase Intention

Environmental attitudes encompass the collection of views, feelings, and aims of a person regarding eco-friendly actions and issues, along with the design of attitudes and behaviors connected to their environmental thoughts and emotions. Kim (2011), Paul et al. (2016), and Chen et al. (2018) indicated that users with strong eco-friendly attitudes are inclined to purchase items that are deemed environmentally friendly. Alwitt and Pitts (1996) demonstrated that eco-friendly attitudes indirectly affect consumers' intention to purchase green goods. Cowan and Kinley (2014) noted a strong correlation between favorable attitudes towards eco-friendly textile products and the intention to purchase them. As stated by Yadav and Pathak (2016), attitudes toward green items directly affect consumers' intention to purchase eco-friendly items. Environmental attitudes are also noted as a mediating variable in many behavioral studies (Ahmed et al., 2023; Ogiemwonyi et al., 2020; Sreen et al., 2018) which is a set of beliefs that are based on the perceived actions of an individual in the environment as well as the activities that may be associated with it. Based on the findings discussed above, the following hypothesis is proposed:

H2: Environmental attitude has a significant relationship with purchase intention.

Green Awareness and Green Purchase Intention with Environmental Attitude

Purchasing green or environmentally friendly products is the desire to engage in eco-friendly purchase. This inclination arises because they perceive these items to be ecologically advantageous. Green purchasing is a marketing tool for acquiring products intended to reduce environmental impact. It is gaining importance as global awareness of sustainability increases (Rambandara & Dilanthi, 2024).

Erdil (2018) and Yadav and Pathak (2017) noted that the habits of customers buying green items in the future are termed their purchasing intention for green goods and that consumer attitudes, beliefs, and perceptions affect their likelihood of buying green goods. The intention to buy green goods aligns with behavioral intentions, indicating that consumers desire eco-friendly items. Customers' environmental consciousness positively influences their intentions to buy green goods (Lestari et al., 2021; Ogiemwonyi et al., 2020). Environmental awareness of green products and ecological issues, along with product perception, significantly enhances university students' purchases (George & Silva, 2022).

Onurlubaş (2018) noted that environmental attitudes serve as an arbitrator between conservational concerns and the intention to buy green goods. It has also been established that ecological anxiety meaningfully stimulates ecological attitudes and the purpose of purchasing green items, whereas eco-friendly attitudes notably affect the aim of achieving green items. Aman et al. (2012) examined conservational attitudes as a mediating factor when evaluating the mediating influence of eco-friendly consciousness on green culture. Sreen et al. (2018) found that attitudes were associated with the educational perspective of environmental consciousness among consumers in India. From the above literature, the following hypothesis is proposed:

H3: Green awareness has a significant relationship with green purchase intention.

H4: Environmental attitude mediates the connection between green awareness and green purchase intention.

RESEARCH METHODOLOGY

Research Design

To explore the influence of green awareness on green purchase intention among university students in Nepal, with the mediating role of environmental attitude, green purchase intention was taken as the dependent variable, and green awareness of university students and environmental attitudes on eco-friendly products buying intention were taken as independent variables. This study used an explanatory research design.

Population, Sample, and Sampling Method

The students who were studying at various levels at Tribhuvan University, the oldest university in Nepal, were considered the population for the study. The 5,87,719 students were studying at Tribhuvan University in fiscal year 2023/24 AD (Ministry of Finance, 2024). Using the formula proposed by Yamane (1967), the sample size was persistent:

$$n=N/(1+N(e)^2)$$

Were,

N = population under study

n = sample size

e = margin error

Total population (N) = 5,87,719 students, Error Margin (e) = 0.05, 95% confidence interval. Therefore, 400 students at Tribhuvan University were selected for this study. Responses were collected from 400 students studying in the various programs and levels of Tribhuvan University of Nepal between September and November 2024 AD. The Kathmandu Valley, which includes Kathmandu (the capital city of Nepal), Lalitpur, and Bhaktapur districts, was used as the study area. Tribhuvan University comprises different levels of study through various subjects and programs across its constituent, public, and private colleges/campuses where the majority of students learn. Owing to its dense population, this area experiences the highest degree of contamination and ecological deterioration relative to other regions of Nepal (Basnet et al., 2024). Consequently, it would be simpler to collect sufficient information regarding green awareness, environmental attitudes, and their effects on green purchasing intentions. This study employed non-probability sampling, specifically purposive sampling, to select 400 students. Researchers employ this method to select respondents or elements that possess particular traits or abilities pertinent to the research goal (Taherdoost, 2020).

Data Collection Instrument

To collect data, a structured questionnaire was administered. The questionnaire was divided into three sections: Section A is a request letter mentioning the use and importance of the valuable responses; Section B is related to demographic profile, including marital status, level of education, gender, employment status, and age group; and Section C is related to information regarding green awareness, environmental attitude, and green purchase intention measures. A 5-point Likert scale was applied to measure the response with 1 indicating strongly disagree and 5 indicating strongly agree. The measures of green awareness with four statements (Suki, 2013), environmental attitude with five statements, and green purchase intention with five statements (Chen et al., 2018) were used.

Research Framework

The following research framework is proposed based on the review of literature:

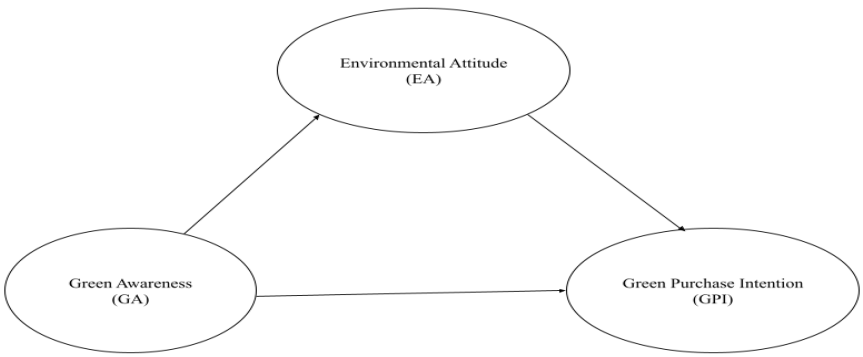

Figure 1. Research Framework Error! Reference source not found. represents the proposed research framework of the p resent study which was adopted from Ogiemwonyi et al. (2020) and Lestari et al. (2021).

Data Analysis

The SPSS version 20 and Stata version 14.2 software were used for data analysis. The frequencies and percentages were used to describe categorical data. Pearson's correlation coefficient was applied to the correlation matrix. To analyze the association between the study variables under the theoretical model of the research, all variables were examined using the Stata software, and a structural equation modeling was created. Second, a formal mediation test based on maximum likelihood path analysis was conducted to separate affiliation in green awareness and green purchase intention via direct and indirect pathways as specified. The model fit of this model was evaluated in terms of the Root Mean Square Error of Approximation (RMSEA), Comparative Fit Index (CFI), Tucker-Lewis Index (TLI), and chi-square test. When CFI > 0.90, TLI > 0.90, and RMSEA < 0.08, the model is considered to have a good fit (Fabrigar et al., 2010; Sivo et al., 2006).

RESULT AND DISCUSSION

Result

In this section, the basic characteristics of the respondents, the correlation between the variables, structural equation modeling, basic indicators, and path analysis are presented and analyzed.

Respondents' Profile

A brief profile of the respondents is presented in Table I. Among the 400 students, only 32.75 percent were male; the majority were 20 to 30 years of age (69 percent) followed by 31-40 years (14.75 percent), and below 20 years (13.25 percent). The majority of students had a master's degree (46.25 percent), and 40.75 percent had a bachelor's degree as an educational qualification. The proportion of employed students was 64.25% and 65.25% of the students were married.

Table I: Respondents' Profile

Basis	Category	Number	Percentage
Gender	Male	131	32.75
	Female	269	67.25
Age	Below 20 Years	53	13.25
	20 to 30 Years	276	69.00
	31 to 40 Years	59	14.75
	Above 40 years	12	3.00
Education	Bachelors	163	40.75
	Masters	185	46.25
	Mphil	39	9.75
	PhD	13	3.25
Employment Status	Employed	257	64.25
	Unemployed	143	35.75
Marital Status	Married	261	65.25
	Unmarried	139	34.75

Correlation between Variables

A statistically noteworthy connection between green awareness, environmental attitude, and green purchase intention was found with the Pearson correlation coefficient (Table II).

Table II: Correlation Matrix

	Green Awareness	Environmental Attitude	Green Purchase Intention
Green Awareness	1		
Environmental Attitude	.629**	1	
Green Purchase Intention	.742**	.778**	1

**. Significant at the 0.01 level (2-tailed).

Structural Equation Model

To examine the relationship among general awareness (GA), environmental attitude (EA), and green purchase intention (GPI), a structural equation model (SEM) is used. Standardized path coefficients (β), standard errors (SE), z-values, and p-values for each hypothesized relationship (Table III**)**. The results indicated that GA significantly predicts EA (β = 0.831, SE = 0.04, z = 23.50, $p < .001$), showing that individuals with greater environmental awareness tend to develop stronger environmental attitudes. Furthermore, EA significantly predicts GPI (β = 0.645, SE = 0.11, z = 5.71, $p < .001$), suggesting that individuals with more positive environmental attitudes were more likely to engage in green purchasing behaviors. Additionally, GA directly influenced GPI (β = 0.377, SE = 0.11, z = 3.26, $p = .001$), although the effect was weaker than that of GA through EA.

Table III: Structural Equation Model

	Coef.	SE	z	p
GA → EA	0.831	0.0354	23.5	0.000
EA → GPI	0.645	0.1129	5.71	0.000
GA → GPI	0.377	0.1148	3.26	0.001

The likelihood ratio chi-square test yielded a statistically significant result ($\chi^2(32) = 171.39$, $p < .001$**),** indicating a significant discrepancy between the conjectured and saturated models. Similarly, the baseline model chi-square test **(**$\chi^2(45) = 1801.57$, $p < .001$**)** indicated that the hypothesized model fit the data better than the null (baseline) model did. The value of RMSEA is 0.084, 90% CI [0.08–0.12], $p < .001$ indicates that the value exceeds the normally recognized threshold of 0.08, indicating a moderate-to-poor fit (MacCallum et al., 1996). The SRMR value (0.049) fell below the suggested threshold of 0.08, indicating a good fit (Hu & Bentler, 1999). A CFI value of 0.921 was above the 0.90 cutoff, demonstrating an acceptable model fit (Bentler, 1992). The TLI value, 0.888, was slightly below the 0.90 threshold, indicating a slightly acceptable fit. The coefficient of determination, 0.902, indicated that the model explained approximately 90.2% of the variance in the observed variables, indicating strong explanatory power (Table IV).

Table IV: Indicators used in Model

Fit statistics	Indicator	Value	p	Description
Likelihood ratio	hi2_ms(32)	171.392	0.000	model vs. saturated
	chi2_bs(45)	1801.57	0.000	baseline vs. saturated
Population error	RMSEA	0.084	0.000	Root mean squared error of Approximation
Information criteria	AIC	9494.46		Akaike's information criterion
	BIC	9626.18		Bayesian information criterion
Baseline comparison	CFI	0.921		Comparative fit index
	TLI	0.888		Tucker-Lewis index
Size of residuals	SRMR	0.049		Standardized root mean squared residual
	CD	0.902		Coefficient of determination

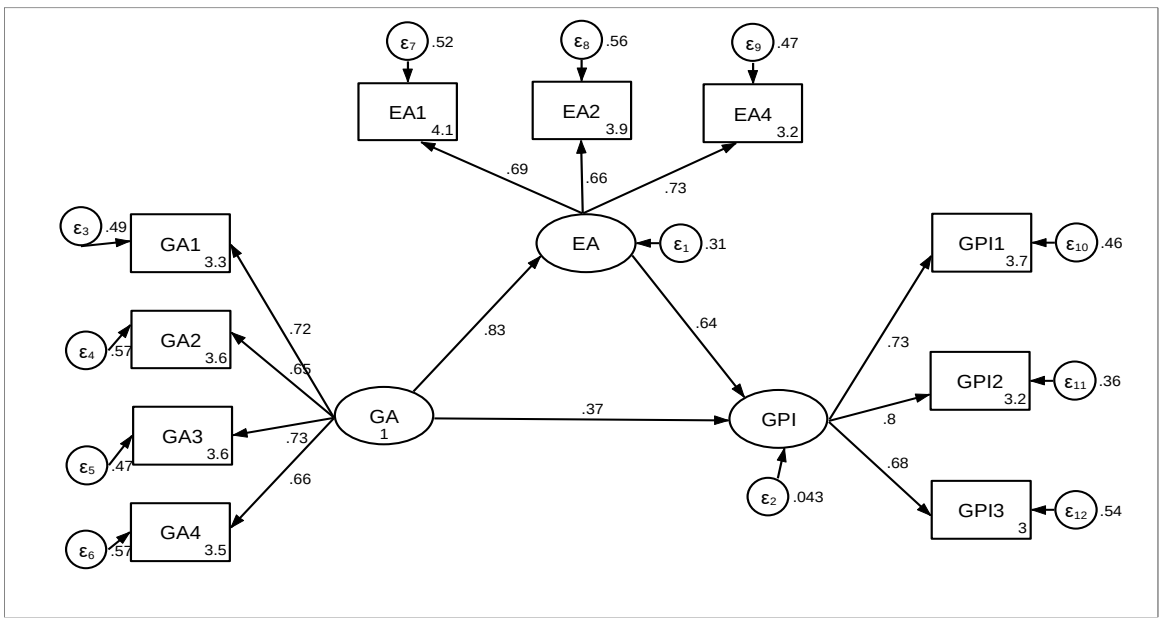

Figure 2. A pathway between green awareness, environmental attitude, and green purchase intention

The direct, indirect, and total effects of these relationships are statistically significant (Table V). The direct effect of green awareness on environmental attitudes was 0.653, which is highly significant ($p < 0.001$). Hence, H1 is supported, and the strong positive effect indicates that green awareness is a powerful predictor of environmental attitudes, meaning that the more aware individuals are, the more likely they are to form a positive attitude toward environmental issues. The effect of environmental attitude on green purchase intention is 0.787, which is highly significant ($p < 0.001$), indicating that H2 is supported. This means that there is a strong and statistically significant effect, signifying that environmental attitudes play a crucial role in determining green purchase intentions. Individuals with a positive attitude toward the environment are more likely to have green buying intentions to engage in behavior or make a particular decision.

Table V: Direct and Indirect Effect of Variables

Effect	Path	Coef.	SE	z	p
	GA → EA	0.653	0.0605	10.79	0.000
Direct	EA → GPI	0.787	0.1583	4.97	0.000
	GA → GPI	0.359	0.1133	3.17	0.002
Indirect	GA → GPI	0.514	0.1046	4.91	0.000
Total	GA → GPI	0.872	0.7239	12.05	0.000

The direct effect of green awareness on green purchase intention is 0.359, which is statistically significant ($p = 0.002$). Thus, hypothesis 3 (H3) is accepted, demonstrating that green awareness has a direct relationship with green purchase intention. The indirect effect of green awareness on green purchase intention (0.514) is significant ($p < 0.001$), supporting H4. This indicates that environmental attitude is a noteworthy mediator in the relationship between green awareness and green purchase intention. In other words, green awareness affects environmental attitudes, which in turn strongly influences the intention to purchase green products. The total effect of general awareness on green purchase intention, combining both the direct and indirect effects, was significant ($\beta = 0.8724$, SE = 0.7239, $z = 12.05$, $p < .001$). This shows that the combined influence of general awareness, both directly and through environmental attitudes, has a substantial effect on the aim of green purchases.

Discussion

The findings of this study confirm the hypothesized model. Thus, the results of the structural equation model strongly support these hypotheses. These findings demonstrate a noteworthy positive correlation between green awareness and environmental attitudes. This finding is consistent with those of Ogiemwonyi et al. (2020) and Shang et al. (2024). They discovered that the green awareness of consumers and university students was significantly related to environmental attitudes. Awareness of the activities that pollute the environment, green products, eco-friendly covering of green products, etc., which are easily recycled or composted, products and services of various organizations, eco-products, and services are useful in maintaining environmental attitudes. Similarly, a significant positive association exists between environmental attitudes and green purchase intention. These results agree with those of Chen et al. (2018), Al-Quran et al. (2020), Zhuang et al. (2021), Ahmed et al. (2023), and Shang et al. (2024). This also implies that the strong feelings of a need for eco-friendly life, great governmental attention to environmental protection, and requiring the consumer to pay courtesy to environmental problems are environmental attitude factors that eventually assist in the development of eco-friendly attitudes for the consumption of green goods.

Similarly, green awareness is also positively and significantly related to green purchase intention, as in Ayodele et al. (2017), Ogiemwonyi et al. (2020), Ansu-Mensah (2021), George and Silva (2022), Kingston and Paulraj (2023) and Shang et al. (2024). Customers who are more alert to environmentally friendly things and acceptable sustainable practices are more likely to indicate that they are likely to buy green items.

In addition, environmental attitudes function as mediators between green awareness and buying. This finding suggests that environmentally related attitudes play an imperative role in amplifying the association between green awareness and the intention to make environmentally friendly purchases. This result is in line with the studies conducted by Ogiemwonyi et al. (2020) on consumers in Nigeria and Indriani et al. (2019) on students at State Universities in Manado, Indonesia, where green product purchase intentions were found to be mediated by environmental knowledge. This clearly shows that raised awareness of the environment can lead to changing people's attitudes and a stronger intention to commit to green purchase intention.

CONCLUSION AND POLICY IMPLICATION

Conclusion

The results of this study show that environmental attitudes mediate the relationship between the awareness and purchase intention of a green product. It also has both direct and indirect effects on beliefs through green purchase intention. The pathway through environmental attitudes is indirect and stronger, indicating that educational and marketing efforts have more influence when they target changes in attitudes as a means of promoting environmentally friendly sustainable consumer behavior. Ultimately, environmental attitude acted as a meaningful mediator, confirming that the association between green awareness and green buying intention functions with the help of attitude. Thus, interventions focusing on raising awareness are needed to complement the goal of influencing attitudes, as pro-environmental attitudes are one of the core motivators for the intention to make green purchases. Strategies aimed at bolstering environmental attitudes, including persuasive messaging and positive framing, are likely to exacerbate the overall consequences of green awareness on green purchase intention. These ramifications help shape the current academic literature on sustainability marketing, environmental policy, and consumer behavior research.

Implications

Theoretical Contribution

The Theory of Planned Behavior (Ajzen, 1991) is supported by the results of this study, which demonstrate the mediating role of attitudes between awareness and intent. In agreement with this study, Value-Belief-Norm Theory (Stern et al., 1999) posits that general environmental knowledge increases awareness, leading to positive beliefs and feelings about environmental issues and plans to engage in environmentally friendly actions. This is because the direct effect of awareness on purchase intention is small, indicating that attitude formation is a necessary step, supporting the argument that behavior-change activities should target attitudes rather than disseminate knowledge.

Policy Implications

This study's results can be used to formulate marketing strategies of marketing, consumer education, and policy design. Companies promoting green products should not only raise awareness (e.g., through eco-labeling and advertising) but also focus on shaping consumer attitudes by emphasizing the

emotional, ethical, and personal benefits of sustainability. Public campaigns should move beyond information-sharing and incorporate persuasive strategies that emphasize social norms, personal values, and emotional appeals. Governments and other organizations should design interventions that enhance environmental attitudes, such as integrating sustainability education into school and university curricula, incentivizing sustainable behavior, and fostering pro-environmental social norms.

Limitations and Further Research

This study included only students from Tribhuvan University, using one mediating variable. Further studies should include students from other universities in Nepal, with more mediating and moderating variables, to identify the factors influencing the intention to green purchase in Nepal.

REFERENCES

Agovino, M., Crociata, A., Quaglione, D., Sacco, P., & Sarra, A. (2017). Good taste tastes good. Cultural capital as a determinant of organic food purchase by Italian consumers: Evidence and policy implications. *Ecological Economics*, *141*, 66-75. https://doi.org/10.1016/j.ecolecon.2017.05.029

Ahmed, R. R., Streimikiene, D., Qadir, H., & Streimikis, J. (2023). Effect of green marketing mix, green customer value, and attitude on green purchase intention: evidence from the USA. *Environmental Science and Pollution Research*, *30*(5), 11473-11495. https://doi.org/10.1007/s11356-022-22944-7

Ajzen, I. (1991). The theory of planned behavior. *Organizational Behavior and Human Decision Processes*. https://doi.org/10.1016/0749-5978(91)90020-T

Aldaihani, F. M. F., Islam, M. A., Saatchi, S. G., & Haque, M. A. (2024). Harnessing green purchase intention of generation Z consumers through green marketing strategies. *Business Strategy & Development*, *7*(3), e419. https://doi.org/10.1002/bsd2.419

Al-Quran, A. Z., Alhalalmeh, M. I., Eldahamsheh, M. M., Mohammad, A. A., Hijjawi, G. S., Almomani, H. M., & Al-Hawary, S. I. (2020). Determinants of the green purchase intention in Jordan: The moderating effect of environmental concern. *International Journal of Supply Chain Management*, *9*(5), 366-371. https://doi.org/10.59160/ijscm.v9i5.5744

Alwitt, L. F., & Pitts, R. E. (1996). Predicting purchase intentions for an environmentally sensitive product. *Journal of Consumer Psychology*, *5*(1), 49-64. https://doi.org/10.1207/s15327663jcp0501_03

Aman, A. L., Harun, A., & Hussein, Z. (2012). The influence of environmental knowledge and concern on green purchase intention the role of attitude as a mediating variable. *British Journal of Arts and Social Sciences*, *7*(2), 145-167.

Ansu-Mensah, P. (2021). Green product awareness effect on green purchase intentions of university students': An emerging market's perspective. *Future Business Journal*, *7*(1), 2-13. https://doi.org/10.1186/s43093-021-00094-5

Ayodele, A. A., Panama, A. E., & Akemu, E. (2017). Green awareness and consumer purchase intention of environmentally-friendly electrical products in Anambra, Nigeria. *Journal of Economics and Sustainable Development*, *8*(22). 98-112.

Basnet, A., Basyal, D. K., Thakur, A., Lawaju, P., Devkota, N., Devkota, J., & Paudel, U. R. (2024). Green marketing and its impact on consumer buying behavior in Kathmandu Valley. *Quest Journal of Management and Social Sciences*, *6*(1), 100-117. https://doi.org/10.3126/qjmss.v6i1.66297

Bentler, P. M. (1992). On the fit of models to covariances and methodology to the Bulletin. *Psychological Bulletin*, *112*(3), 400-404. https://doi.org/10.1037/0033-2909.112.3.400

Bishowkarma, R., & Lohala, R. (2024). Attitude towards green brands and green purchase intention: Moderating role of willingness to pay premium among consumers in Kathmandu Valley. *SAIM Journal of Social Science and Technology*, *1*(1), 41-52. https://doi.org/10.70320/sacm.2024.v01i01.004

Chanda, R. C., Isa, S. M., & Ahmed, T. (2023). Factors influencing customers' green purchasing intention: Evidence from developing country. *Journal of Science and Technology Policy Management*. 2053-4620. https://doi.org/10.1108/JSTPM-03-2022-0044

Chang, K. C., Hsu, C. L., Hsu, Y. T., & Chen, M. C. (2019). How green marketing, perceived motives and incentives influence behavioral intentions. *Journal of Retailing and Consumer Services*, 49, 336-345. https://doi.org/10.1016/j.jretconser.2019.04.012

Chaudhary, M. K., Chaudhary, R. K., & Pokharel, P. (2024). Green marketing's role in molding customer buying decision for green products. *Journal of Emerging Management Studies*, *1*(2), 137-147. https://doi.org/10.3126/jems. v1i2.71521

Chen, C. C., Chen, C. W., & Tung, Y. C. (2018). Exploring the consumer behavior of intention to purchase green products in belt and road countries: An empirical analysis. *Sustainability*, *10*(3), 2-18. https://doi:10.3390/su10030854

Chen, Y. S., & Chang, C. H. (2012). Enhance green purchase intentions: The roles of green perceived value, green perceived risk, and green trust. *Management Decision*, *50*(3), 502-520. https://doi.org/10.1108/00251741211216250

Cowan, K., & Kinley, T. (2014). Green spirit: Consumer empathies for green apparel. *International Journal of Consumer Studies*, *38*(5), 493-499. https://doi.org/10.1111/ijcs.12125

De Medeiros, J. F., & Ribeiro, J. L. D. (2017). Environmentally sustainable innovation: Expected attributes in the purchase of green products. *Journal of Cleaner Production*, *142*, 240-248. https://doi.org/10.1016/j.jclepro.2016.07.191

Dhakal, G. (2022). Consumer purchase awareness and intention towards green products. *Global Scientific Journal*, *10*(1), 300-402.

Diva, VWMA (2020) Green purchase intention: the impact of green brand cosmetics (green brand knowledge, attitude toward green brand, green brand equity). *Manag Sustain Development Journal*, 2(1), 79–103.

Erdil, M. (2018). Understanding the drivers of generation Y consumers' green purchase intention: price sensitivity as a moderating variable. *Journal of Business, Economics, and Finance,* 7(1), 89-100. https://doi.org/10.17261/Pressacademia.2018.798

Fabrigar, L. R., Porter, R. D., & Norris, M. E. (2010). Some things you should know about structural equation modeling but never thought to ask. *Journal of Consumer Psychology*, *20*(2), 221-225. https://doi.org/10.1016/j.jcps.2010.03.003

George, H. I. C., & Silva, H. P. T. N. (2022). Factors affecting awareness and attitudes on the green purchase intention of eco-friendly products in university students. *International Journal of Research and Innovation in Social Science (IJRISS), 6*(2), 592-596.

Ghimire, S. K. (2020) Attitudes and purchase intention towards eco-friendly products among Nepalese youth. *International Journal of Operational Research/Nepal*, *9*(1), 33-44. https://doi.org/10.3126/ijorn.v9i1.51845

Hayat, K., Jianjun, Z., & Ullah, S. (2023). Relationship of corporate social responsibility and impulse buying: Role of corporate reputation and consumer company identification. *International Journal of Management Research and Emerging Sciences*, *13*(1). 133-154. https://doi.org/10.56536/ijmres.v13i1.376

Hoang Yen, N. T., & Hoang, D. P. (2023). The formation of attitudes and intention towards green purchase: An analysis of internal and external mechanisms. *Cogent Business & Management*, *10*(1), 2192844. https://doi.org/10.1080/23311975.2023.2192844

Hu, L. T., & Bentler, P. M. (1999). Cutoff criteria for fit indexes in covariance structure analysis: Conventional criteria versus new alternatives. *Structural Equation Modeling: A Multidisciplinary Journal*, *6*(1), 1-55. https://doi.org/10.1080/10705519909540118

Imiru, G. A. (2023). The mediating role of green purchase intention between antecedents of green purchase intention and consumer's green buying behaviour: Empirical evidence in Ethiopia. *International Journal of Marketing Studies*, *15*(1), 31-58. https://doi.org/10.5539/ijms.v15n1p31

Indriani, I. A. D., Rahayu, M., & Hadiwidjojo, D. (2019). The influence of environmental knowledge on green purchase intention the role of attitude as mediating variable. *International Journal of Multicultural and Multireligious Understanding*, *6*(2), 627-635. http://dx.doi.org/10.18415/ijmmu.v6i2.706

Joshi, Y., & Rahman, Z. (2015). Factors affecting green purchase behaviour and future research directions. *International Strategic Management Review*, *3*(1-2), 128-143. https://doi.org/10.1016/j.ism.2015.04.001

Kim, N., & Lee, K. (2023). Environmental consciousness, purchase intention, and actual purchase behavior of eco-friendly products: the moderating impact of situational context. *International Journal of Environmental Research and Public Health*, *20*(7), 5312. https://doi.org/10.3390/ijerph20075312

Kim, Y. E. O. N. S. H. I. N. (2011). Understanding green purchase: The influence of collectivism, personal values and environmental attitudes, and the moderating effect of perceived consumer effectiveness. *Seoul Journal of Business*, *17*(1), 65-92.

Kingston, A., & Paulraj, G. (2023). Examining the effects of green attitude on the purchase intention of sustainable packaging. *Sustainability, Agri, Food and Environmental Research-DISCONTINUED*, 12(1). http://dx.doi.org/10.7770/safer-V12N1-art2659

Lamichhane, B. (2022). Customer perception towards green products in Pokhara valley. *Janapriya Journal of Interdisciplinary Studies*, *11*(1), 1-15.

Lasuin, C. A., & Ng, Y. C. (2014). Factors influencing green purchase intention among university students. *Malaysian Journal of Business and Economics (MJBE)*, *1*(2). 1-14. https://doi.org/10.51200/mjbe.v1i2.116

Lestari, E. R., Septifani, R., & Nisak, K. (2021). Green awareness and green purchase intention: The moderating role of corporate image. In *IOP Conference Series: Earth and Environmental Science*, *924*(1), IOP Publishing. https://doi.org/10.1088/1755-1315/924/1/012051

Liu, F., & Madni, G. R. (2024). Moderating role of policy incentive and perceived cost in relationship of environmental awareness and green consumption behavior. *Plos one*, *19*(2), e0296632. https://doi.org/10.1371/journal.pone.0296632

Lopes, J. M., Gomes, S., & Trancoso, T. (2024). Navigating the green maze: insights for businesses on consumer decision-making and the mediating role of their environmental concerns. *Sustainability Accounting, Management and Policy Journal*. 15(4), 861-883. https://doi.org/10.1108/SAMPJ-07-2023-0492

MacCallum, R. C., Browne, M. W., & Sugawara, H. M. (1996). Power analysis and determination of sample size for covariance structure modeling. *Psychological Methods*, *1*(2), 130-139. https://doi.org/10.1037/1082-989X.1.2.130

Minisry of Finance. (2024). *Economic survey 2023/24*. Kathmandu: Government of Nepal.

Mishra, U., & Kapair, R. (2024). Examining the antecedents of green purchase intention. *Dristikon: A Multidisciplinary Journal*, *14*(1), 161-174. https://doi.org/10.3126/dristikon.v14i1.66059

Moslehpour, M., Yin Chau, K., Du, L., Qiu, R., Lin, C. Y., & Batbayar, B. (2023). Predictors of green purchase intention toward eco-innovation and green products: Evidence from Taiwan. *Economic Research-Ekonomska istraživanja*, *36*(2). https://doi.org/10.1080/1331677X.2022.2121934

Nguyen, X. H., Nguyen, T. T., Anh Dang, T. H., Dat Ngo, T., Nguyen, T. M., & Anh Vu, T. K. (2024). The influence of electronic word of mouth and perceived value on green purchase intention in Vietnam. *Cogent Business & Management*, *11*(1), 2292797. https://doi.org/10.1080/23311975.2023.2292797

Ogiemwonyi, O., Harun, A. B., Alam, M. N., & Othman, B. A. (2020). Do we care about going green? Measuring the effect of green environmental awareness, green product value and environmental attitude on green culture. An insight from Nigeria. *Environmental and Climate Technologies*, *24*(1), 254-274. https://doi.org/10.2478/rtuect-2020-0015

Onurlubaş, E. (2018). The mediating role of environmental attitude on the impact of environmental concern on green product purchasing intention. *EMAJ: Emerging Markets Journal*, *8*(2), 5-18. https://doi.org/10.5195/emaj.2018.158

Paul, J., Modi, A., & Patel, J. (2016). Predicting green product consumption using theory of planned behavior and reasoned action. *Journal of Retailing and Consumer Services*, *29*, 123-134. https://doi.org/10.1016/j.jretconser.2015.11.006

Rambandara, R. D. S. S., & Dilanthi, M. G. S. (2024). Purchase intentions of the university students toward green products: A literature review. *International Journal of Education and Research, 12*(6). 71-88.

Rauniyar, S., & Bhattacharya, S. (2023). An exploratory study on the influence of advertisements and product promotions on green buying behavior in Nepal. *LBEF Research Journal of Science, Technology and Management, 5*(3), 1-16.

Sarkis, J., Dewick, P., & Cordeiro, J. J. (2019). *Building circular economies and industrial symbiosis: Handbook of research*. Edward Elgar Publishing.

Sarmad, I., Bukhari, S. M. H., & Hafeez, S. (2024). Consumer responses to eco-friendly product claims: The role of information asymmetry and online reviews. *International Journal of Management Research and Emerging Sciences*, *14*(4). https://doi.org/10.56536/ijmres.v14i4.714

Shang, W., Zhu, R., Liu, W., & Liu, Q. (2024). Understanding the influences on green purchase intention with moderation by sustainability awareness. *Sustainability*, *16*(11), 4688. https://doi.org/10.3390/ su16114688

Simiyu, G., & Kariuki, V. W. (2024). Self-image and green buying intentions among university students: The role of environmental concern and social influence. *Journal of Nonprofit & Public Sector Marketing*, *36*(3), 364-391. https://doi.org/10.1080/10495142.2023.2178589

Singh, R. K., Garg, D., & Deshmukh, S. G. (2019). Sustainable product design: A review of literature and application. *Journal of Manufacturing Systems*, 50, 10-34.

Sivo, S. A., Fan, X., Witta, E. L., & Willse, J. T. (2006). The search for optimal cutoff properties: Fit index criteria in structural equation modeling. *The Journal of Experimental Education*, *74*(3), 267-288. https://doi.org/10.3200/JEXE.74.3.267-288

Sreen, N., Purbey, S., & Sadarangani, P. (2018). Impact of culture, behavior and gender on green purchase intention. *Journal of Retailing and Consumer Services*, *41*, 177-189. https://doi.org/10.1016/j.jretconser.2017.12.002

Stern, P. C., Dietz, T., Abel, T., Guagnano, G. A., & Kalof, L. (1999). A value-belief-norm theory of support for social movements: The case of environmentalism. *Human Ecology Review*, 81-97. https://cedar.wwu.edu/hcop_facpubs/1

Suki, N. M. (2013). Green awareness effects on consumers' purchasing decision: Some insights from Malaysia. *International Journal of Asia-Pacific Studies*, *9*(2), 49-63.

Taherdoost, H. (2016). Sampling methods in research methodology: How to choose a sampling technique for research. *International Journal of Academic Research in Management*, 5(2), 10. https://hal.science/hal-02546796v1

Trivedi, R. H., Patel, J. D., & Acharya, N. (2018). Causality analysis of media influence on environmental attitude, intention and behaviors leading to green purchasing. *Journal of Cleaner Production*, 196, 11-22. https://doi.org/10.1016/j.jclepro.2018.06.024

Vassileva, E., Kirova, S., & Hristov, J. (2020). The energy strategy of the Republic of Bulgaria: Between modernization and ecological modernization. *Journal of Cleaner Production*, 250, 119558.

Wang, C. P., Zhang, Q., Wong, P. P. W., & Wang, L. (2023). Consumers' green purchase intention to visit green hotels: A value-belief-norm theory perspective. *Frontiers in Psychology*, *14*, 1139116. https://doi.org/10.3389/fpsyg.2023.1139116

Wang, P., Liu, Q., & Qi, Y. (2014). Factors influencing sustainable consumption behaviors: a survey of the rural residents in China. *Journal of Cleaner Production*, *63*, 152-165. https://doi.org/10.1016/j.jclepro.2013.05.007

Wu, B., & Yang, Z. (2018). The impact of moral identity on consumers' green consumption tendency: The role of perceived responsibility for environmental damage. *Journal of Environmental Psychology*, *59*, 74-84. https://doi.org/10.1016/j.jenvp.2018.08.011

Yadav, R., & Pathak, G. S. (2016). Young consumers' intention towards buying green products in a developing nation: Extending the theory of planned behavior. *Journal of Cleaner Production*, *135*, 732-739. https://doi.org/10.1016/j.jclepro.2016.06.120

Yadav, R., & Pathak, G. S. (2017). Determinants of consumers' green purchase behavior in a developing nation: Applying and extending the theory of planned behavior. *Ecological Economics*, *134*, 114-122. https://doi.org/10.1016/j.ecolecon.2016.12.019

Yamane, T. (1967). *Statistics: An Introductory Analysis*. 2nd ed. New York: Harper and Row.

Zaheer, K., Khan, S., & Raees, M. (2023). The role of GBK in influencing green purchase intention: a SEM study of University students. *Voyage Journal of Educational Studies*, *3*(2), 243-259. https://doi.org/10.58622/vjes.v3i2.69

Zhang, L., Li, D., Cao, C., & Huang, S. (2018). The influence of greenwashing perception on green purchasing intentions: The mediating role of green word-of-mouth and moderating role of green concern. *Journal of Cleaner Production*, *187*, 740-750. https://doi.org/10.1016/j.jclepro.2018.03.201

Zhuang, W., Luo, X., & Riaz, M. U. (2021). On the factors influencing green purchase intention: A meta-analysis approach. *Frontiers in Psychology*, *12*, 644020. https://doi.org/10.3389/fpsyg.2021.644020

Zulfiqar, M., Ahmad, M., & Mahar, S. (2019). Cause related marketing and green products purchase decision. *International Journal of Management Research and Emerging Sciences*, *9*(1). 114-127. https://doi.org/10.56536/ijmres.v9i1.54

Appendix: Measures of Variables

Variables	Code	Statements	Measure from
Green Awareness	GA1	I am worried about how all of my activities affect the environment.	Suki (2013)
	GA2	Innovative and new image of eco-friendly product created by some companies tend to attract consumers in going green.	
	GA3	I'm more likely to buy green products that are packaged in an eco-friendly manner and made easy for recycling or composting.	
	GA4	I would choose environmentally friendly goods and services, campaigns or companies if the price were the same or even at a premium price.	
Environmental Attitude	EA1	Advocating an environmentally lifestyle is necessary.	Chen et al. (2018)
	EA2	I think the government needs to focus more on environmental protection.	
	EA3	It is very important to promote consumers' attention to environmental issues.	
	EA4	I think it's important to control environmental pollution.	
	EA5	I think the earth's resources are limited, so environmental protection is important.	
Green Purchase Intention	GPI1	In the future, I will buy green products with less environmental pollution.	Chen et al. (2018)
	GPI2	I plan to buy green products in the future.	
	GPI3	I would advise others to buy and use green products.	
	GPI4	I will buy green products in accordance with government advice.	
	GPI5	I am very likely to buy green products in the future.	